TTARTISAN

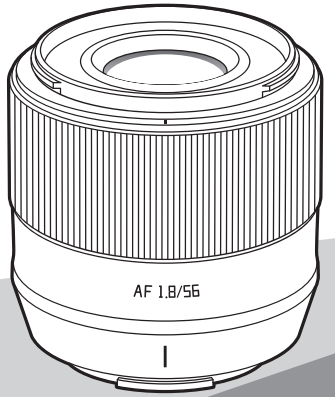

AF 56mm F1.8

说明书 INSTRUCTION MANUAL

镜头参数 LENS SPECIFICATION

焦段	56mm	Focal Length	56mm
最大光圈	F1.8	Maximum Aperture	F1.8
最小光圈	F16	Minimum Aperture	F16
画幅	APS-C	Frame	APS-C
对焦方式	自动对焦	Focus Method	Automatic Focusing
滤镜尺寸	52mm	Filter Size	52mm
最近对焦距离	0.5m	Closest Focusing Distance	0.5m
视角	28°	Angle of View	28 °
光圈叶片	9片	Diaphragm Blades	9 pcs
光学结构	9组10片	Optical Design	10 Elements in 9 Groups
卡口	E / X / Z	Lens Mount	E / X / Z
重量	233~245g（约）	Weight	Around 233~245 g

MTF

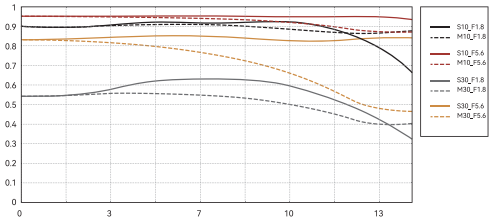

光学结构图 OPTICAL DESIGN

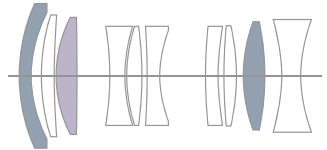

高折射镜片 High Index　超低色散镜片 Extra low Dispersion



固件更新 FIRMWARE UPDATE

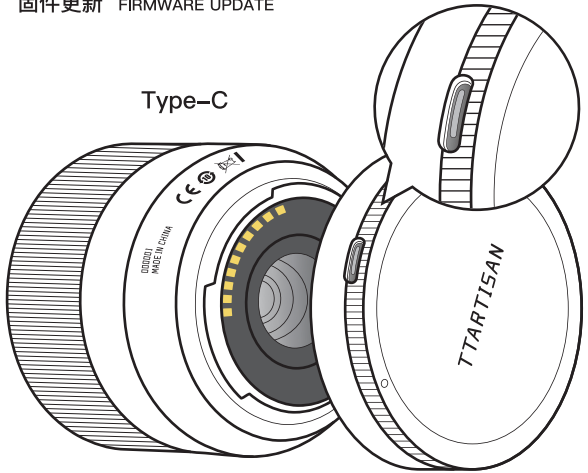

铭匠官网提供固件更新文件下载
cn.ttartisan.com

Download firmware update from the official website
www.ttartisan.com

安装与卸载 INSTALL AND UNINSTALL

安装镜头 INSTALL THE LENS

把镜头卡口上的圆点对准相机上的圆点，然后顺时针转动镜头，听到"嗒"的声音代表镜头已安装到位。

※安装镜头时请勿按相机上的镜头释放按钮

Align the dots on the lens mount with the dots on the camera, and then turn the lens clockwise. When you hear a "click" sound, it means that the lens is in place.

※do not press the lens release button on the camera when installingthe lens.

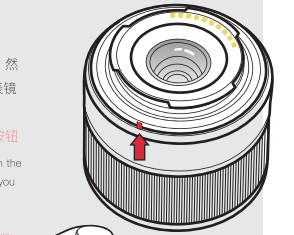

卸载镜头 UNINSTALL THE LENS

按下相机镜头释放的按钮, 然后逆时针转动镜头即可取出。

Press the release button, and then turn the lens counterclockwise to remove it.

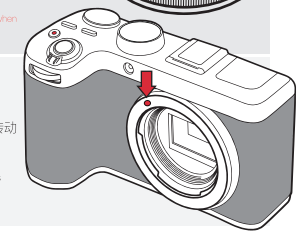

⚠ 安全提示 WARNING

请勿将镜头或相机对着太阳及其他强光源，以免损伤眼睛。
贮存镜头的环境应避免阳光直射，以免光线汇聚引发火灾。
请勿将镜头放置于儿童易触及的地方，防止不可估量的危险。

Do not point the lens or camera directly at the sun or other strong light sources to avoid eye damage.

The storage environment of the lens should be kept away from direct sunlight, so as not to converge and heat to cause a fire.

Do not place the lens in a place where children can reach it to prevent immeasurable danger.

使用小贴士 TIPS

请在干燥环境下贮存镜头，避免受潮发霉，以免影响成像。
本产品不具有防水功能，使用过程应避开水源。
镜头清洁时，请先用气吹吹几下镜片表面，再用干净、柔软镜头布/纸轻轻擦拭。

Please store the lens in a dry environment to avoid moisture and mold, which may affect the image quality.

This product does not have a waterproof function, so avoid water sources during use.

When cleaning the lens, please blow the surface of the lens several times with air blower, and then gently wipe with a clean,soft lens cloth/paper.

以座右铭·匠心永隽

The Thinking Artisan